MAKER-FEATHER-AIOT-S3

Simplifying AIoT with ESP32-S3

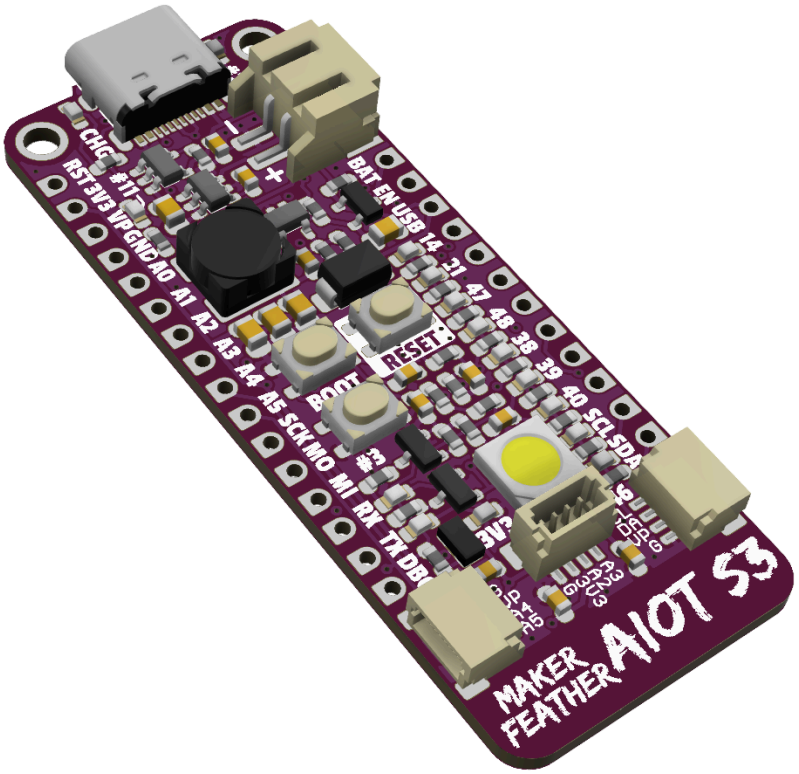

Datasheet

Rev 1.1
January 2023

Information in this publication regarding device applications and the like is intended through suggestion only and may be superseded by updates. It is your responsibility to ensure that your application meets with your specifications. No representation or warranty is given and no liability is assumed by Cytron Technologies Incorporated with respect to the accuracy or use of such information or infringement of patents or other intellectual property rights arising from such use or otherwise. Use of Cytron Technologies's products as critical components in life support systems is not authorized except with express written approval by Cytron Technologies. No licenses are conveyed, implicitly or otherwise, under any intellectual property rights.

1. BOARD LAYOUT & FUNCTION

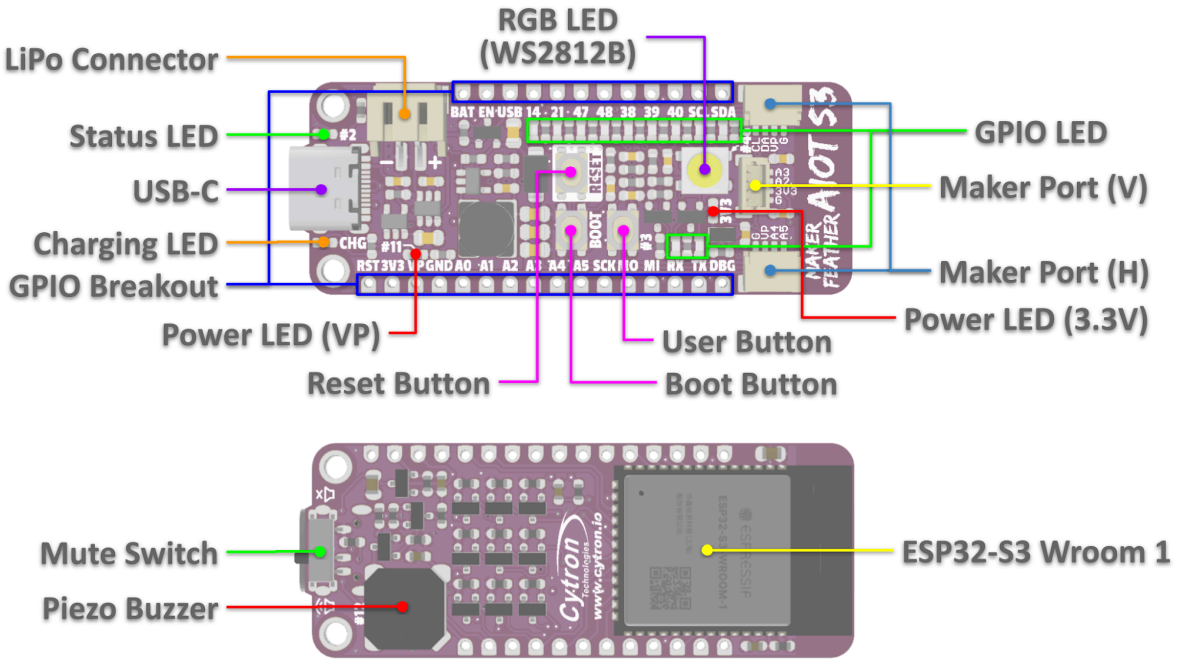

Figure 1: MAKER-FEATHER-AIOT-S3 Board Functions

Function	Description
LiPo Connector	Connect to Single Cell LiPo / Li-Ion Battery. Rechargeable via USB-C. * *The battery is protected from overcharged and over discharged. If the board cannot be turned on when the battery is connected, please charge the battery to activate the battery protection circuit.*
Status LED	User programmable LED connected to GPIO2. Used as the status indicator for CircuitPython & UF2 Bootloader too.
USB-C	Connect to PC to load programs. Used to power up the board and charge the battery too.
Charging LED	Turn on when the LiPo / Li-Ion battery is charging.
GPIO Breakout	GPIOs breakout for external connection. Compatible with Adafruit Feather form factor.
Power LED (VP)	Turn on when VP (VPeripheral) is enabled. * *VPeripheral is 3.3V which can be turned OFF to save power. It's controlled by D11.*
Reset Button	Press once to reset the ESP32-S3. Press twice to enter UF2 Bootloader.
User Button	Accessible from the user program. Connected to GPIO3.
Boot Button	Press and hold this button while resetting the ESP32-S3 will enter the ROM Bootloader. ESPTOOL is needed to upload the firmware to the ESP32-S3.

	* *The UF2 Bootloader will be overridden if the ESP32-S3 is programmed via ROM Bootloader.*
Power LED (3.3V)	Turn on when powered up.
Maker Port (H)*	JST-SH 4-Ways Connector for external modules. Compatible with Qwiic, STEMMA QT and Grove (Via Conversion Cable). ● **Maker Port (H)** - Powered by VPeripheral ● **Maker Port (V)** - Powered by 3V3, always ON
Maker Port (V)	
GPIO LED*	LED indicator for digital IO. Turn on when the IO state is high.
RGB LED* (WS2812B)	User programmable WS2812B RGB LED connected to GPIO46. Used as the status indicator for CircuitPython & UF2 Bootloader too.
Mute Switch	Used to mute the buzzer.
Piezo Buzzer*	Programmable passive piezo buzzer. Connected to GPIO12.
ESP-32 Wroom 1	ESP32-S3 Wroom 1 N8R8 module from Espressif. ● 8MB PFLASH ● 8MB PSRAM
VIN Sense	Measure the VIN voltage via analog input A12. VADC = 0.6 * VIN (VIN = VUSB or VBATT whichever is higher)

Table 1: MAKER-FEATHER-AIOT-S3 Board Functions

* *GPIO LED, RGB LED, Piezo Buzzer and Maker Port (H) are powered by the Vperipheral. Make sure it's enabled by turning on D11 before using them.*
* *Vperipheral is enabled by default for CircuitPython and Arduino Core. It needs to be turned on manually for Espressif IDF.*

2. PINOUT DIAGRAM

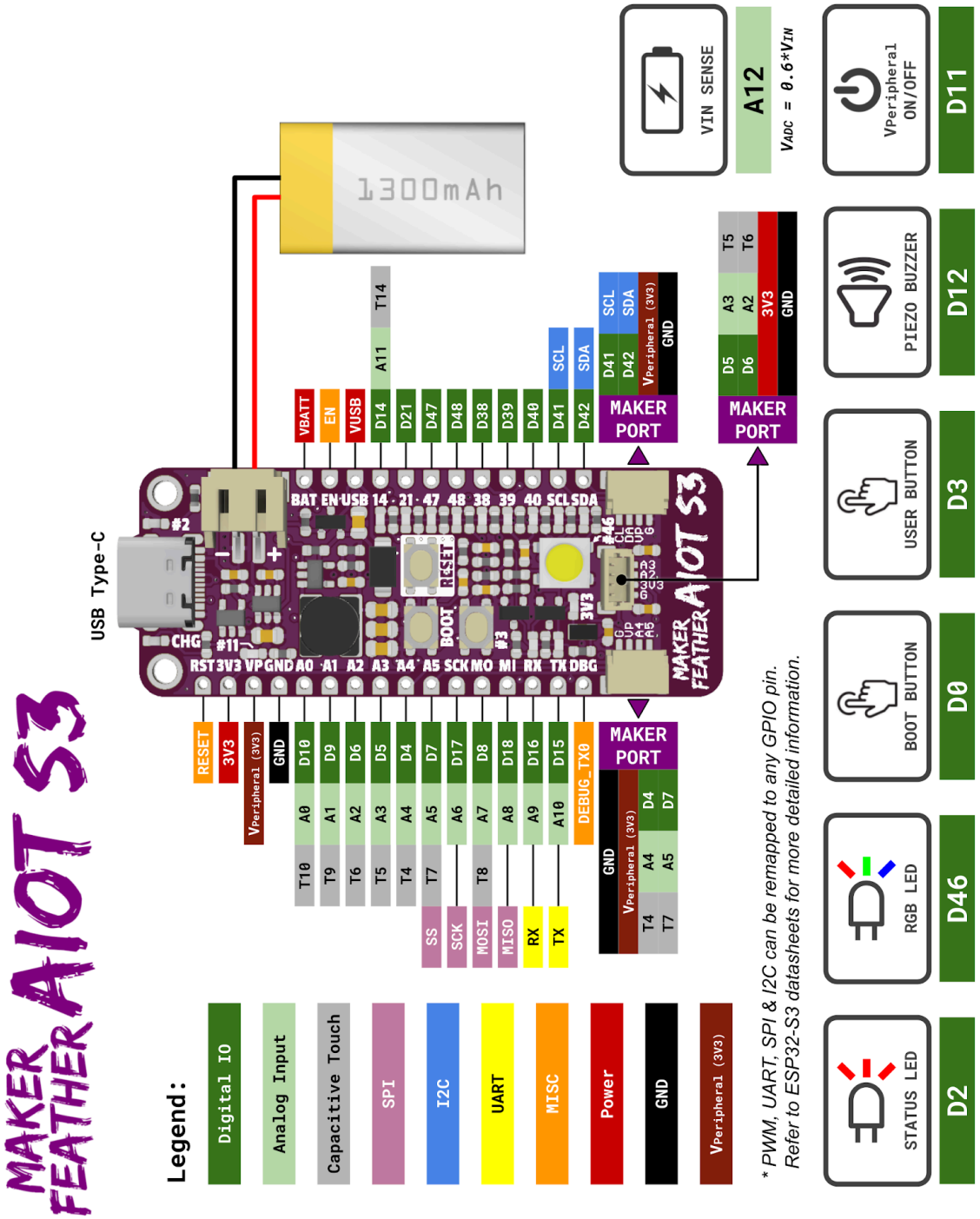

Figure 3: MAKER-FEATHER-AIOT-S3 Pinout Diagram

3. SPECIFICATIONS

No.	Parameters		Min	Max	Unit
1	Power Input Voltage	USB (V_{USB})	4.5	5.5	VDC
		LiPo Battery (V_{BAT})	3.3	4.2	VDC
2	3V3 Maximum Current (Including Onboard Usage)		1000		mA
3	Digital Input Voltage	Low Level (V_{IL})	-0.3	0.8	V
		High Level (V_{IH})	2.5	3.6	V
4	Analog Input Voltage		-0.3	3.6	V
5	Digital Output Voltage	Low Level (V_{OL})	0	0.4	V
		High Level (V_{OH})	2.6	3.3	V
6	Digital Output Current	Low Level Sink (I_{OL})	28		mA
		High Level Source (I_{OH})	40		mA
7	Internal Pull Resistor	Pull-Up (R_{PU})	45		kΩ
		Pull-Down (R_{PD})	45		kΩ
8	Operating Temperature		-20	65	℃

Table 3: MAKER-FEATHER-AIOT-S3 Absolute Maximum Ratings

4. USB VID and PID

No.	Description		Value (Hex)
1	USB Vendor ID (VID)		0x303A
2	USB Product ID (PID)	Arduino Core	0x80F8
		CircuitPython	0x80F9
		UF2 Bootloader	0x80FA

Table 4: USB VID & PID for MAKER-FEATHER-AIOT-S3

Reference: https://github.com/espressif/usb-pids

5. DIMENSION

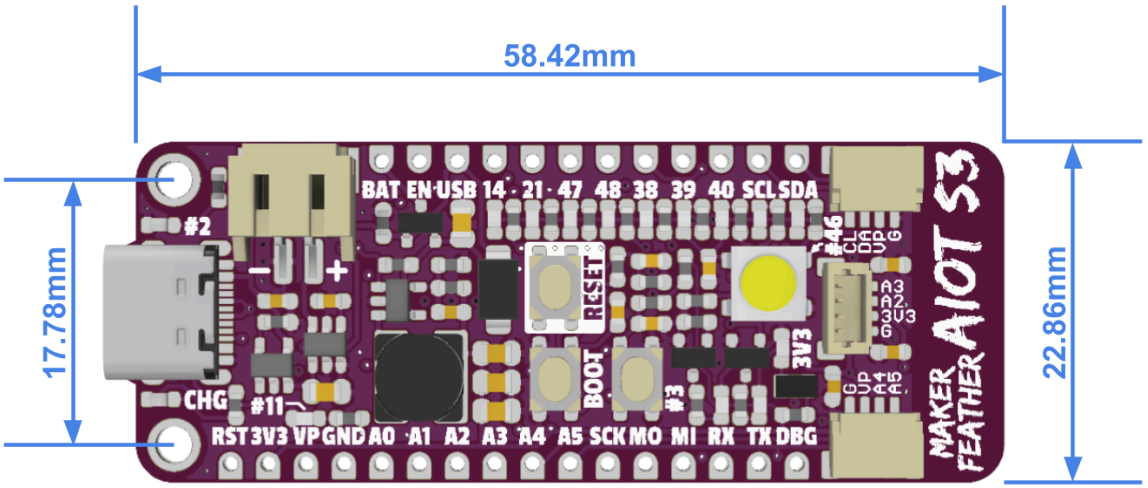

Figure 4: MAKER-FEATHER-AIOT-S3 Dimension

6. BOOTLOADER

Maker Feather AIoT S3 comes with two types of bootloader, which are:

- UF2 Bootloader
- ROM Bootloader

6.1 UF2 Bootloader

Maker Feather AIoT S3 comes pre-installed with the UF2 bootloader. In this mode, the board is detected as "**MFAS3BOOT**" drive and we can program the firmware (eg: CircuitPython) by dragging the *.uf2 file into the drive.

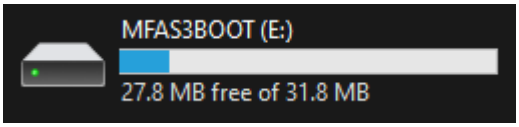

To enter this bootloader mode, connect the board to the computer with a USB-C data cable (charging cable will not work) and press the RESET button two times. These indicate that we're already in the UF2 bootloader mode:

- RGB LED showing green color.
- Status LED blinking slowly.
- A drive detected as "MFAS3BOOT".

However, the UF2 bootloader might be corrupted or overwritten sometimes (Eg: When an Arduino Sketch with wrong board selected is uploaded). In that case, we will need to reinstall the UF2 bootloader using the ROM bootloader mode.

6.2 ROM Bootloader

The ROM bootloader is in the ESP32-S3 ROM (Read-Only Memory) and it can never be erased or corrupted. Thus we can always use this to reload the UF2 bootloader when needed.

To enter the ROM bootloader, we need to:

1. Connect the Maker Feather AIoT S3 to the computer.
2. Press and **hold** the **BOOT** button.
3. Press and **release** the **RESET** button. Make sure the BOOT button is still pressed while resetting the board.
4. Now you can release the BOOT button. You should see a new COM port on your computer.

Now, download the latest release of the UF2 bootloader firmware from tinyuf2 github repo. Look for the file named: **tinyuf2-cytron_maker_feather_aiot_s3-xxx.zip** (NOT the UF2 updater file). Then, unzip the *.bin files into a folder.

To install the UF2 bootloader onto Maker Feather AIoT S3, we recommend using the WebSerial ESPTool. Please take note that a Chromium browser (like Chrome, Opera, Edge...) is needed for this to work. Safari, Firefox, etc. are not supported.

Open this link with the Chromium browser:
https://espressif.github.io/esptool-js/

Make sure the Maker Feather AIoT S3 is in ROM bootloader mode.
Connect the WebSerial ESPTool to the board.

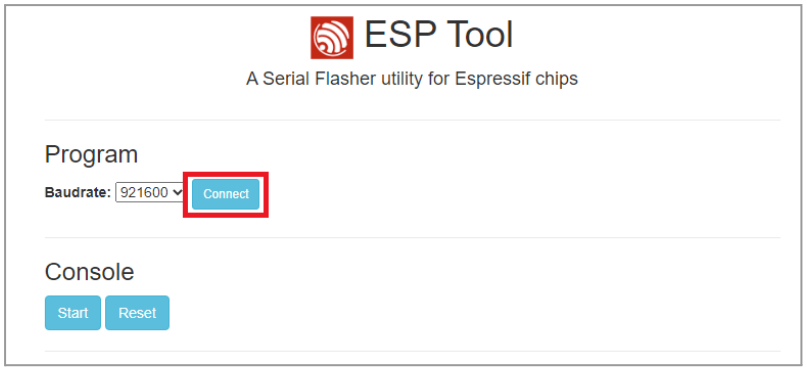

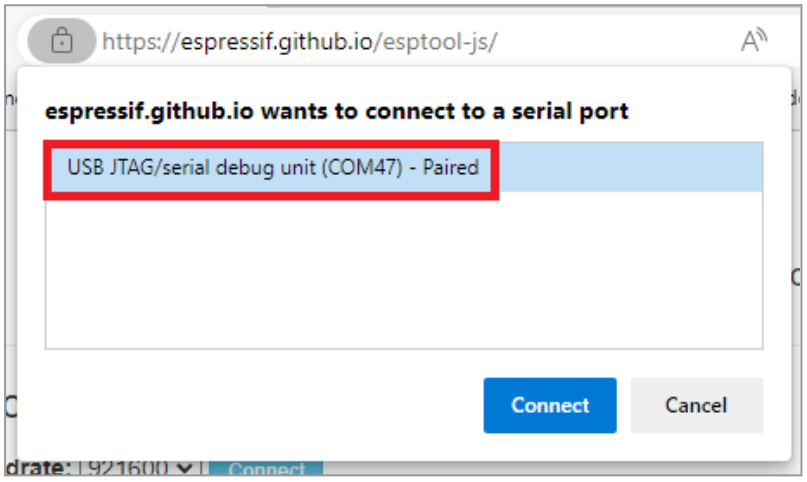

You should see something similar to this if the ESP32-S3 is connected successfully.

```
esptool.js v0.1-dev
Serial port WebSerial VendorID 0x303a ProductID 0x1001
Connecting....
Detecting chip type... ESP32-S3
Chip is ESP32-S3
Features: Wi-Fi,BLE
Crystal is 40MHz
MAC: 7c:df:a1:e3:97:5c
Uploading stub...
Running stub...
Stub running...
Changing baudrate to 921600
Changed
```

Select the following binary files from the folder you just unzipped (Click the **Add File** button to select more files). Make sure the address is correct.

- **bootloader.bin** - 0x0
- **partition-table.bin** - 0x8000
- **ota_data_initial.bin** - 0xE000
- **tinyuf2.bin** - 0x410000

It's recommended to erase the flash before programming the bootloader. This may take up to one minute.

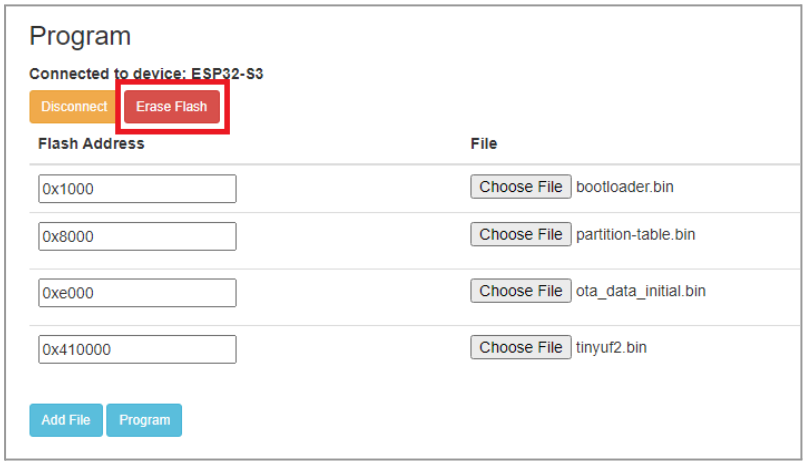


```
Erasing flash (this may take a while)...
Chip erase completed successfully in 28.881s
```

Click the **Program** button to upload the UF2 bootloader firmware to the ESP32-S3.

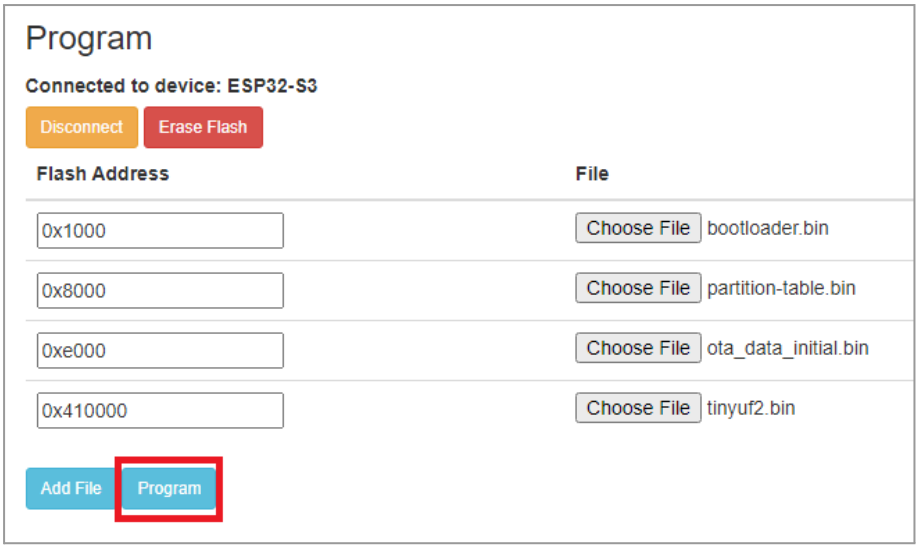

The UF2 Bootloader should be installed successfully if you see something similar to these messages. Reset the board when completed.

```
Compressed 22260 bytes to 14041...
Writing at 0x1000... (100%)
Wrote 22260 bytes (14041 compressed) at 0x1000 in 0.493 seconds.
Hash of data verified.
Compressed 3076 bytes to 136...
Writing at 0x8000... (100%)
Wrote 3076 bytes (136 compressed) at 0x8000 in 0.064 seconds.
Hash of data verified.
Compressed 8196 bytes to 30...
Writing at 0xe000... (100%)
Wrote 8196 bytes (30 compressed) at 0xe000 in 0.161 seconds.
Hash of data verified.
Compressed 149252 bytes to 94708...
Writing at 0x410000... (16%)
Writing at 0x414000... (33%)
Writing at 0x418000... (50%)
Writing at 0x41c000... (66%)
Writing at 0x420000... (83%)
Writing at 0x424000... (100%)
Wrote 149252 bytes (94708 compressed) at 0x410000 in 1.857 seconds.
Hash of data verified.
Leaving...
```

Prepared by:

Cytron Technologies Sdn Bhd
www.cytron.io
No. 1, Lorong Industri Impian 1,
Taman Industri Impian,
14000 Bukit Mertajam,
Penang, Malaysia.

Tel: +604 - 548 0668
Fax: +604 - 548 0669

Email:
support@cytron.io
sales@cytron.io